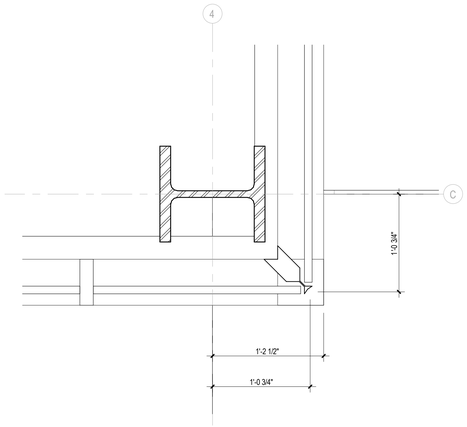

3 A103B **Callout (2) of 3rd Area B**
1 1/2" = 1'-0"

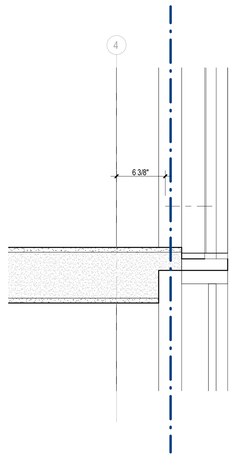

2 A103B **Callout of 3rd Area B**
1 1/2" = 1'-0"

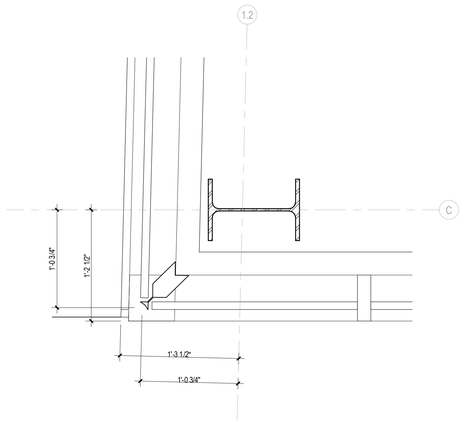

4 A103B **Callout (3) of 3rd Area B**
1 1/2" = 1'-0"

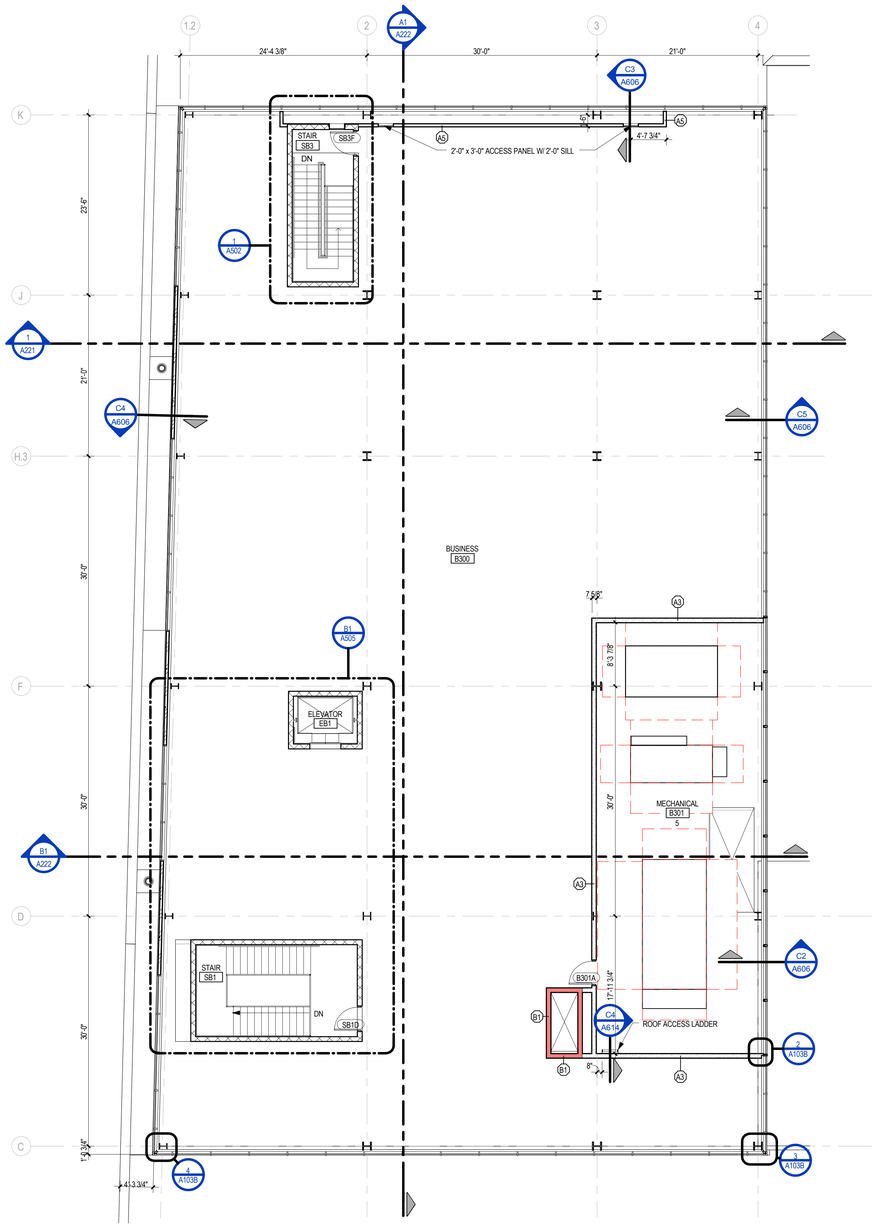

NORTH

THIRD FLOOR PLAN - AREA B
1/8" = 1'-0"

B

KEY PLAN

Hugh A. Boyd ARCHITECTS

fi:gh Design+

2315 E. Fulton
Grand Rapids
MI 49503-3211
P 616.459.3275
F 616.459.3875

REVISIONS ON SHEET

Revision Dates	
Mark	Revision

PRELIMINARY DATES

05/29/2013	Bidder
11/12/2013	Bid Set Revisions
11/22/2013	Cost Review
11/22/2013	CA Review
01/31/2014	Bid Set Revisions
02/07/2014	Re-Bid Review
02/20/2014	Re-Bid Revisions
02/25/2014	CD Re-Issue
03/07/2014	Progress Set - SP#3
08/11/2014	100% DD

PRINT SET

DESIGNER	C. Nicely
MANAGER	A. Searcy
DRAWN BY	
CHECKED BY	
FILE PATH	
PLOT DATE	3/8/2022 3:11:04 PM

• Grand Action
• Grand Rapids Urban Market
• 435 Ionia Ave. SW & 130 Logan St. SW
• Grand Rapids, MI 49503

Progress Set - Bid Package #3

• Architectural
• Third Floor - Area B
• 10061

sheet number
A103B